MASTER PRICE LIST

Users' Price

Supplement No. 8PL-U-3

EFFECTIVE NOVEMBER 15, 1963

Motor-rotor T.M. REPAIR STAND

Ref: Bulletin No. ES-63

NOTE: PRICES OF ITEMS LISTED HERE VOID AND SUPERSEDE THOSE LISTED IN MASTER PRICE LIST NO. 8PL-U, DATED OCTOBER 18, 1963.

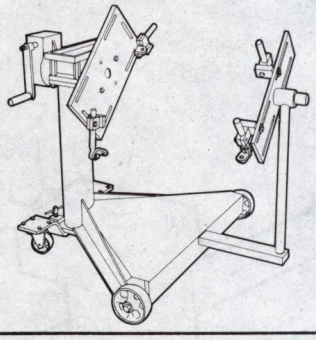

No. 1700-B

"Motor-rotor" Universal Repair Stand . . . Includes the following: Basic Stand with Outboard Support; No. 1715 Outboard Support Mounting Plate; No. 1720 Universal Mounting Plate; four No. 1718 "Adjustagrip" Mounting Arms; No. 1775 Wheel and Caster Assembly.
Shipping Weight: 418 lbs.

USERS' PRICE $398.95

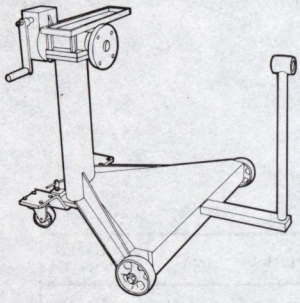

No. 1700-A

"Motor-rotor" Universal Repair Stand . . . Includes the following: Basic Stand with Outboard Support and No. 1775 Wheel and Caster Assembly only.
Shipping Weight: 330 lbs.

USERS' PRICE $316.75

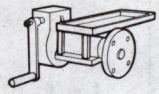

No. 1700-C

Gear Box Assembly only . . . shipping weight: 64 lbs.

USERS' PRICE $145.20

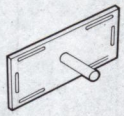

No. 1715

Outboard Support Mounting Plate only . . . shipping weight: 32 lbs.

USERS' PRICE $22.95

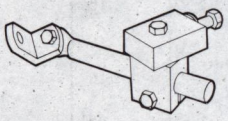

No. 1718

"Adjustagrip" Universal Mounting Arm . . . one only. Shipping weight: 4 lbs.

USERS' PRICE $9.90

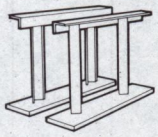

No. 1719

Pair of Support Stands . . . shipping weight: 32 lbs.

USERS' PRICE $17.00

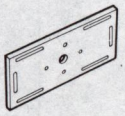

No. 1720

Universal Mounting Plate only . . . shipping weight: 31 lbs.

USERS' PRICE $19.65

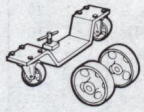

No. 1775

Wheel and Caster Assembly only . . . Shipping weight: 42 lbs.

USERS' PRICE $45.00

NOTE: ALL ITEMS LISTED ABOVE ARE SHIPPED F.O.B. OWATONNA, MINNESOTA

SEE REVERSE SIDE FOR PARTS-PRICE INFORMATION

OWATONNA TOOL COMPANY
OWATONNA, MINNESOTA, U.S.A.
CABLE ADDRESS: TOOLCO

LITHO IN U.S.A.

PARTS-PRICE LIST

Motor-rotor REPAIR STAND

T.M.

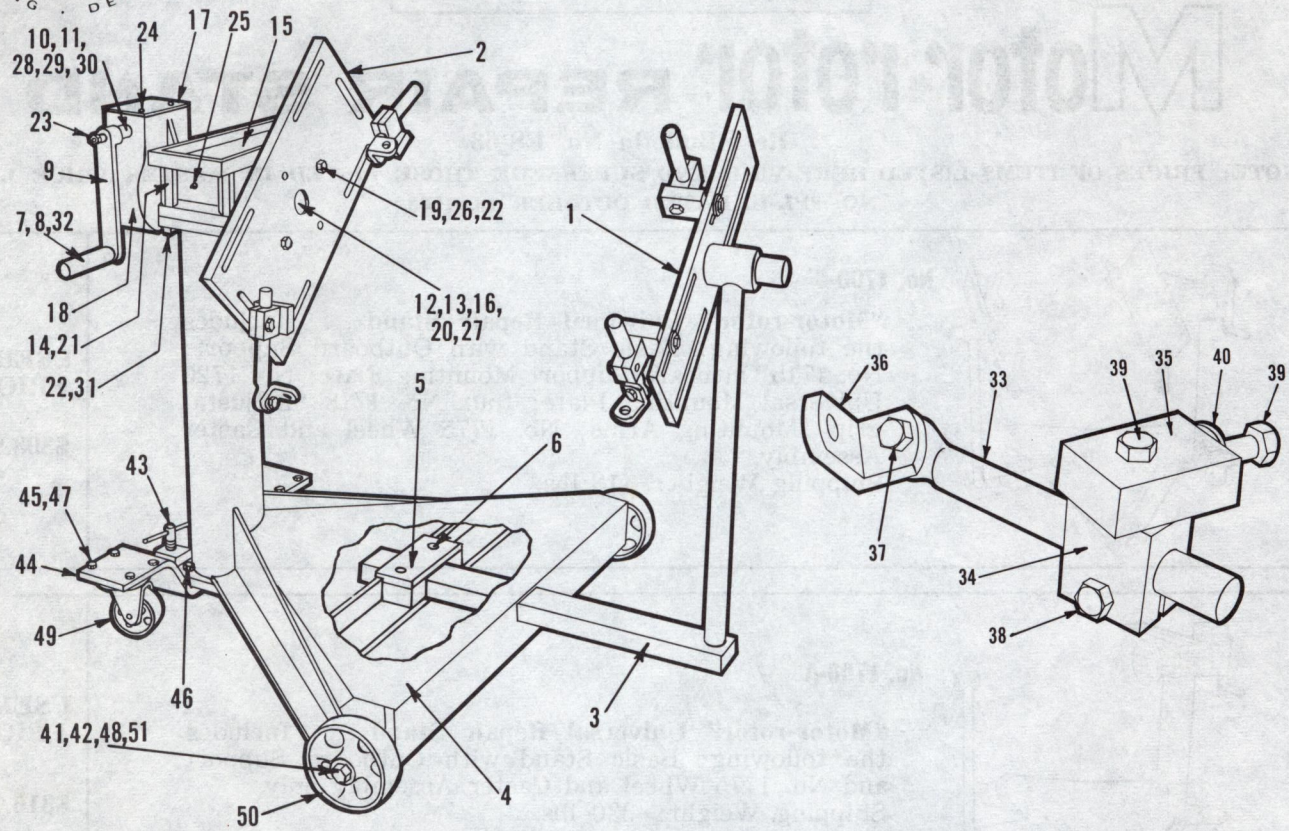

Item	Part No.	No. Req'd	Description	Users' Price Ea.
1	1715	1	Outbd. Support Mount. Plate	$22.95
2	1720	1	Universal Mounting Plate	19.65
3	40423	1	Outboard Support	53.95
4	31416	1	Cover Plate	12.15
5	23041	1	Cover Plate	2.95
6	10050	2	Soc. Hd. Cap Screw, ⅜"—16NC x 1¼"	.10
7	21500	1	Handle	2.50
8	21501	1	Shoulder Bolt	1.75
9	22813	1	Strap and Collar	6.75
10	21504	1	Worm Shaft	3.75
11	21505	1	Worm Spacer	1.50
12	21506	1	Worm Gear	30.75
13	21516	1	Key	.30
14	21540	4	Tool Tray Risers	1.25
15	30681	1	Tool Tray	4.50
16	30684	1	Mounting Plate Adapter	26.75
17	30693	1	Worm Gear Cover	2.75
18	40170	1	Worm Gear Bracket	58.50
19	10099	4	Hex Hd. Cap Screw, ⅝"—11NC x 1½"	.20
20	10556	1	Soc. Set Screw, ¼"—20 NC x ¼"	.20
21	10174	4	Rd. Hd. Mach. Screw, ¼"—20NC x ½"	.10
22	10214	8	Reg. Hex Nut, ⅝"—11NC	.20
23	10390	1	Reg. Hex Jam Nut, ½"—20NF	.10
24	10447	2	Slotted Rd. Hd. Mach. Screw, 8-32 x 5/16"	.10
25	10750	1	Zerk Fitting	.25
26	10819	4	Hex Hd. Cap Screw, ⅝"—11NC x 2"	.25
27	10977	1	Soc. Set Screw, ½"—13NC x ½"	.30
28	10979	1	Worm	19.80
29	10980	2	Oilite Bearing	.95

Item	Part No.	No. Req'd	Description	Users' Price Ea.
30	10982	1	Roll Pin, ¼" x 1½"	$ .10
31	10251	4	Spring-type Lock Washer, ⅝" bolt size	.10
32	10391	1	Reg. Hex Jam Nut, ½"—13NC	.10
33	23032	1	Adjusting Arm	2.75
34	23034	1	Block	4.85
35	23035	1	Block	2.35
36	23037	1	Angle Bracket (accepts ½" bolt)	1.50
36	23380	1	Angle Bracket (accepts ¾" bolt, is optional item)	1.50
37	10079	1	Hex Hd. Cap Screw, ½"—13NC x 1"	.10
38	10080	1	Hex Hd. Cap Screw, ½"—13NC x 1¼"	.10
39	10083	2	Hex Hd. Cap Screw, ½"—13NC x 1½"	.15
40	10586	1	Wrought Washer, 1¼" bolt size	.10
41	21511	2	Special Washer	.85
42	21512	2	Wheel Bracket Bushing	1.50
43	21515	1	Lock Screw and Handle Assembly	6.50
44	30692	1	Caster Bracket	17.95
45	10052	8	Hex Hd. Cap Screw, ⅜"—16NC x 1¼"	.10
46	10080	4	Hex Hd. Cap Screw, ½"—13NC x 1¼"	.10
47	10204	8	Reg. Hex Nut, ⅜"—16NC	.10
48	10395	2	Hex Jam Nut, ⅝"—11NC	.10
49	10966	2	Swivel Caster	8.95
50	10967	2	Wheel	7.65
51	10983	2	Hex Hd. Screw, ⅝"—11NC x 5½"	.65

OWATONNA TOOL COMPANY

OWATONNA, MINNESOTA, U.S.A.

CABLE ADDRESS: TOOLCO